habo

Small things. Big difference.

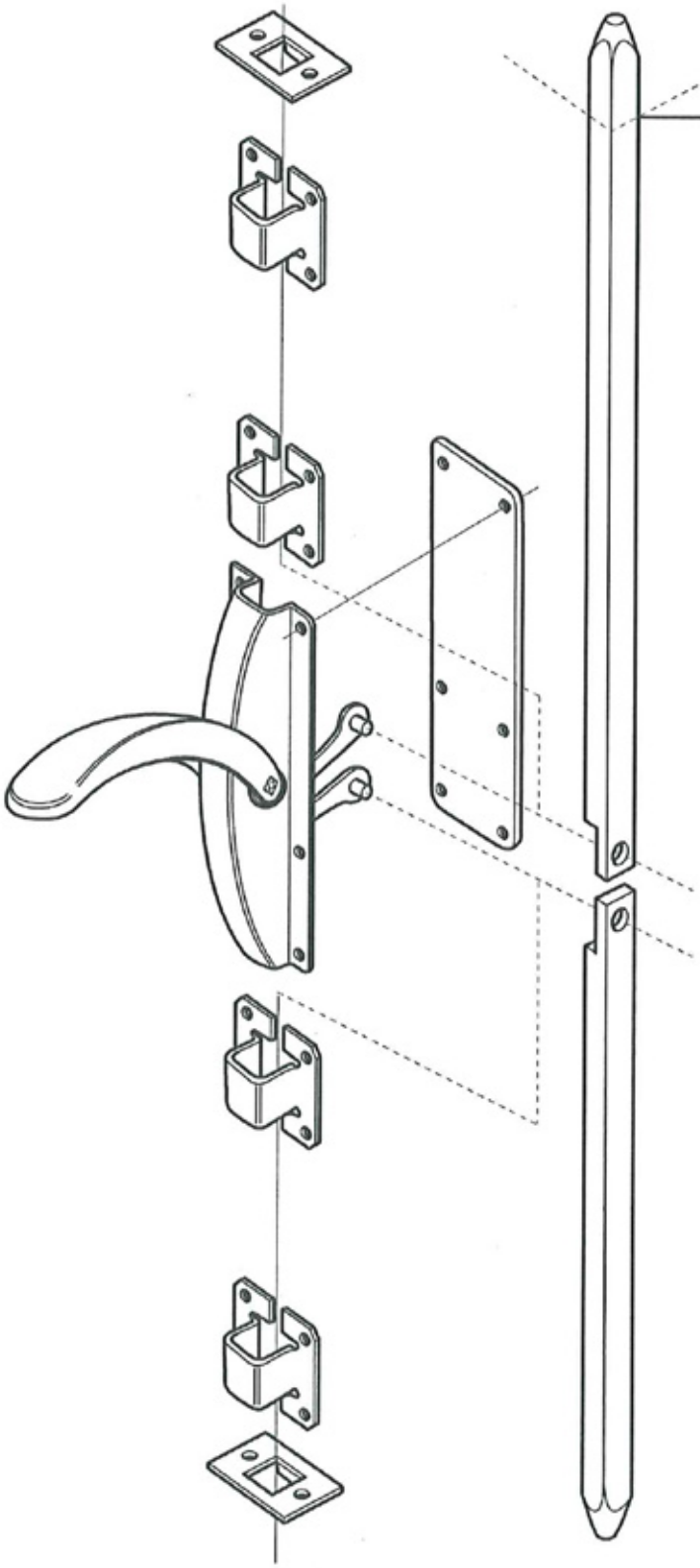

OBS!
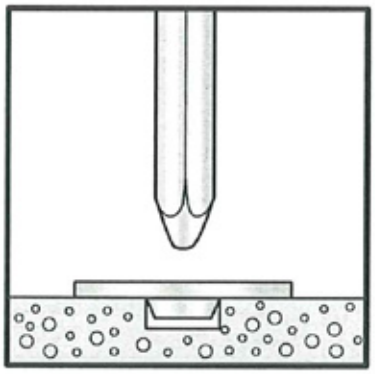
Monteras öppen